Analytical Chemistry 1 (125101)

Guangdong Technion
Israel Institute of Technology
广东以色列理工学院

Section I

Chemical Measurement

Framework of this course

❖ Introduction (L1)

❖ Section I Chemical Measurements

1.1 Basic knowledge (L2)

1.2 Error and estimation (L3&L4)

1.3 Linear regression (L5)

❖ Section II Chemical Equilibrium

2.1 pH and buffer solutions (L6)

2.2 Titrations (L7&L8)

2.3 Potentiometry in titrations (L9)

2.4 Gran plot in titrations (L10)

2.5 Electroanalysis (L11)

2.6 gravimetric analysis (L12)

❖ Summary (L13)

Magnitude with its error

1.2 Experimental errors & their estimation

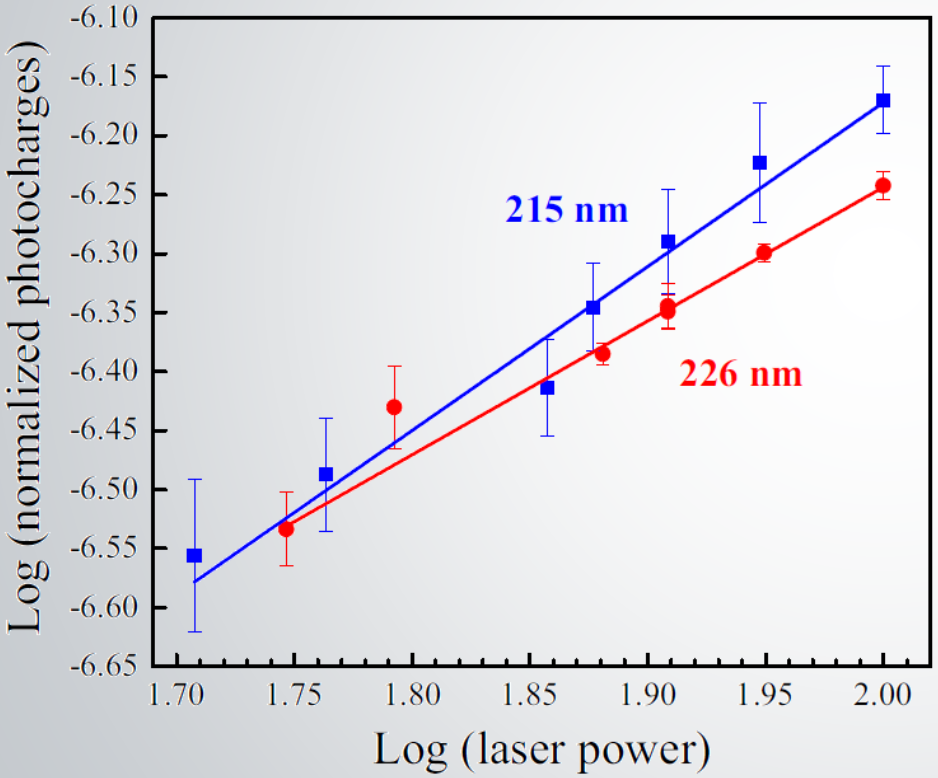

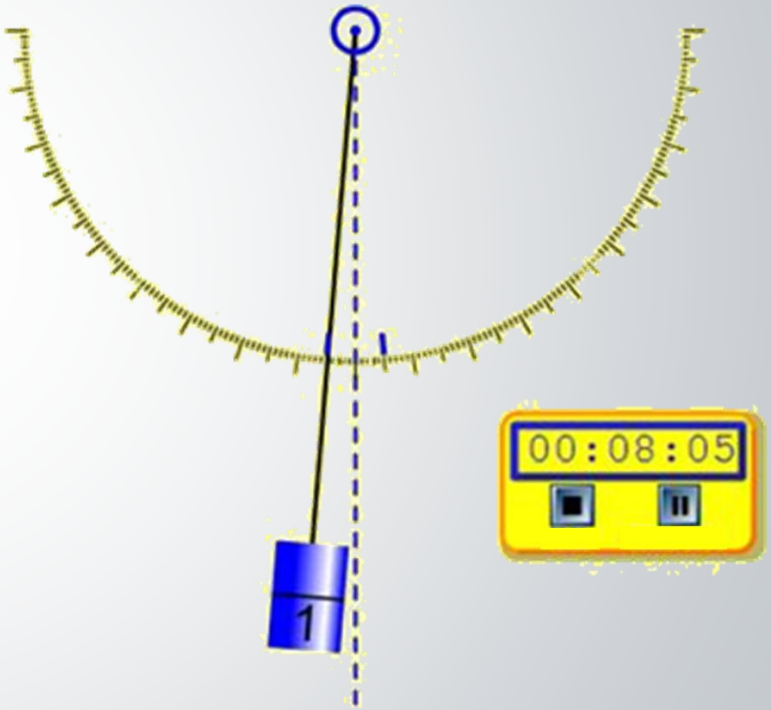

Tang S S, Talanta, 155 235–244, 2016

1.2 Experimental errors & their estimation

Overview

1.2-1 Precision and accuracy

1.2-2 Significant figure

Keep S.F. in arithmetic

1.2-3 Experimental error

Propagation of errors

1.2-4 Standard deviation

1.2-5 Presentation of results

Targets

1. To know how to keep significant figures;
2. To distinct between various kinds of error;
3. To calculate “propagation of errors”;
4. To estimate the experimental random error;
5. To know how to report experimental results;

Experimental Error

- There is an error associated with every measurement;
- Repetition of one method several times tells us the reproducibility;
- There is no way to measure the "true" value of analyte;
- If the results of measuring same quantity by different methods agree each other, it means the results are near to the "true" value;

Experimental Error

1. **Trueness** — Ideal value, however, it is objective existence. We can obtain it by infinite measurements;

2. **Standard** — Closeness of agreement between the average value obtained from a large series of test or an accepted reference value;

3. **Precision** — Closeness between independent results obtained under stipulated conditions.

4. **Accuracy** — Closeness between a quantity value obtained by finite measurement and the "true" value.

1.2-1 Precision and Accuracy

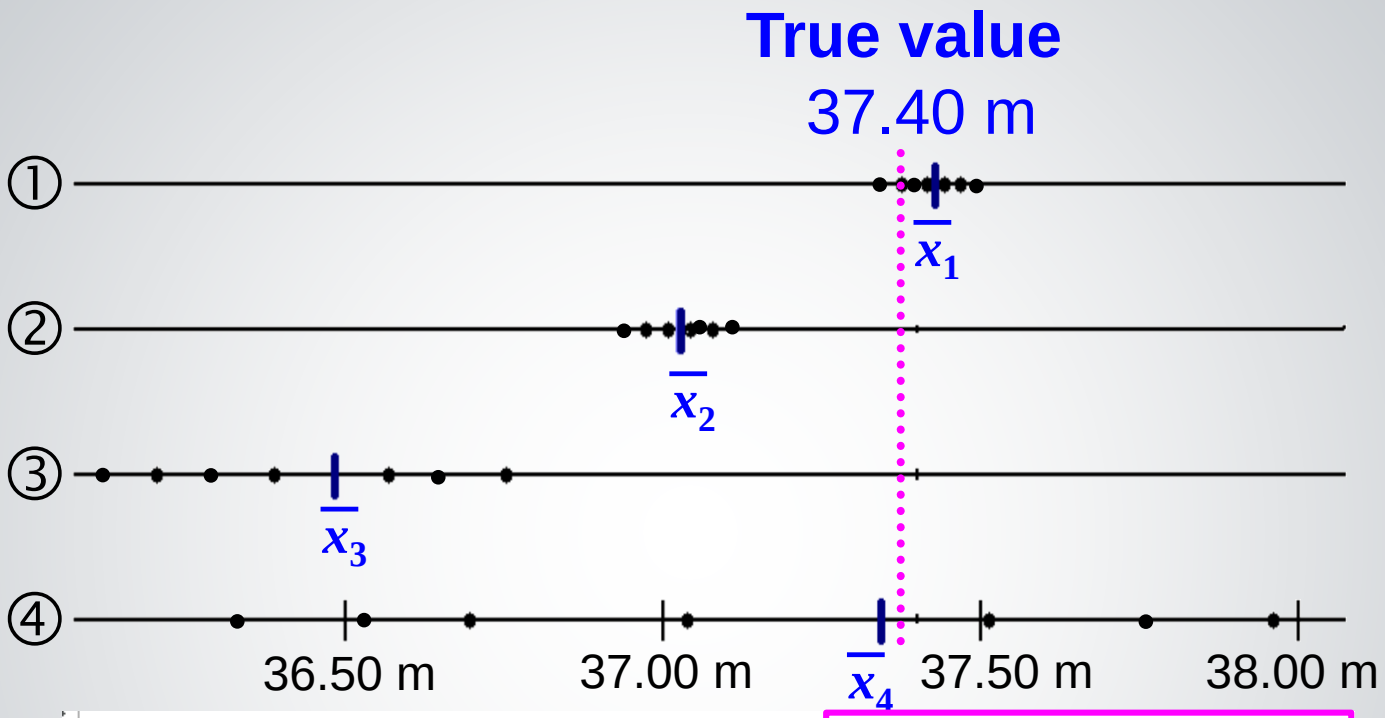

methods	Errors		Analytical properties	
	Random	Systematic	Accuracy	Precision
①	Low	Low	High	High
②	Low	High	Low	High
③	High	High	Low	Low
④	High	Low	Low	Low

Experimental Error

How to produce the Uncertainty in Measurements

We are uncertain, however, about the sample's mass in the last decimal place since the final two decimal places fluctuate between 29, 30, and 31. The best we can do is to report the sample's mass as 0.5730 g ± 0.0001 g, indicating both its magnitude and its absolute uncertainty.

1.2-2 Significant Figures

The number of significant figures in a measurement is the number of digits known exactly plus one digit whose value is uncertain. (It is an estimate number)

The mass shown in Figure as measured 3 times for example, has four significant figures, three which we know exactly and one, the last, which is uncertain.

0.5729

0.5731

0.5730

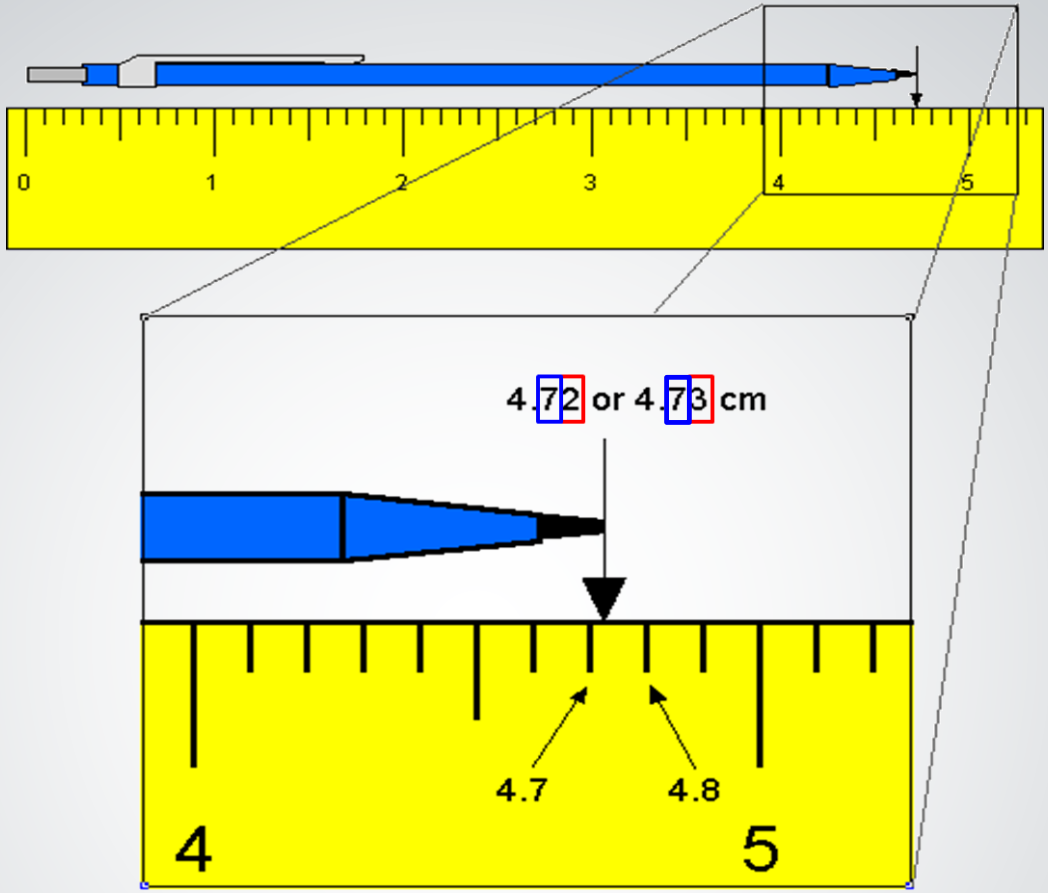

Significant Figures

- The number of significant figures is the minimum number of digits need to write a given value in scientific notation **without loss of information**.

Significant Figures

92 500 could mean:

9.25×10^4	3 significant figures
9.250×10^4	4 significant figures
9.2500×10^4	5 significant figures

- **You should write one of three numbers above, i.e. in scientific notation instead of 92 500 to indicate how many significant figures are actually known.**
- **How to keep the S.F. in arithmetic?**

Significant Figures

- **How about the S.F. in arithmetic?**
  - ✓ **Addition and Subtraction**
  - ✓ **Multiplication and Division**
  - ✓ **Logarithm**
  - ✓ **Antilogarithm /Exponent**

Significant Figures: Addition/Subtraction

In addition and subtraction, the **last significant figure** is determined by the number with the **fewest decimal places** (when all exponents are equal).

Example:

$$\begin{array}{r} 1.362 \times 10^{-4} \\ \underline{+\ 3.111 \times 10^{-4}} \\ 4.473 \times 10^{-4} \end{array} \qquad \begin{array}{r} 1.362 \times 10^{-4} \\ \underline{+\ 3.1\quad \times 10^{-4}} \\ 4.5 \times 10^{-4} \end{array}$$

Multiplication / Division

Multiplication and division

- The number of figures is limited by the factor with the **smallest** number of significant figures.

Example:

$$\begin{array}{r} 34.60 \\ \underline{\div\ 2.462\ 87} \\ 14.05 \end{array}$$

Significant Figures: Logarithms

Logarithm of a quantity

Number of digits in **mantissa** of log x

= Number of significant figure (SF) in x:

$$\log (x = \underbrace{5.403}_{\text{4 SF}} \times 10^{-8}) = -7.\underbrace{2674}_{\text{Mantissa 4 digits}}$$

Significant Figures: Logarithms

Logarithm of a quantity

- What is the pH of a solution that is 0.026 M of H^+?

$$pH = -\log[H^+]$$

$$pH = -\log[\underbrace{0.026}_{\text{2 SF}}]$$

$$pH = 1.\underbrace{59}_{\text{mantissa 2 digits}}$$

Antilogarithm (exponent) of a quantity

2 digits

$$\text{antilog}\,(-3.\underbrace{42}_{\text{2 digits in mantissa}}) = 10^{-3.42} = \underbrace{3.8}_{\text{2 SF}} \times 10^{-4}$$

$$\log\,(x=\underbrace{5.403}_{\text{4 SF}} \times 10^{-8}) = -7.\underbrace{2674}_{\text{4 digits}}$$

Practice

$\log 0.001237 = -2.907$

$\text{antilog}\ 4.37 = 2.31 \times 10^{4}$

$\log 1.237\times10^{4} = 3.0924$

$10^{4.37} = 2.3 \times 10^{4}$

$\log 3.2 = 0.511$

$10^{-2.600} = 2.5 \times 10^{-3}$

- Antilogarithm (exponent) of a quantity

2 digits

$$\text{antilog}\,(-3.\underbrace{42}_{\text{2 digits}}) = 10^{-3.42} = \underbrace{3.8}_{\text{2 SF}} \times 10^{-4}$$

$$\log\,(x=\underbrace{5.403}_{\text{4 SF}} \times 10^{-8}) = -7.\underbrace{2674}_{\text{4 digits}}$$

Practice

$\log 0.001237 = -2.907\mathbf{6}$

$\log 1237 = 3.0924$

$\log 3.2 = 0.51_1$

$\text{anilog}\ 4.37 = 2.3_1 \times 10^4$

$10^{4.37} = 2.3 \times 10^4$

$10^{-2.600} = 2.5\mathbf{1} \times 10^{-3}$

Rounding

- Always retain **more digits** than necessary during a calculation and round off to the appropriate number of digits at the end.
- Look at ***all* the digits** *beyond* the last place desired.
  - **Round up** if this number is more than halfway to the next higher digit. $121.794_{806\,4}$ is rounded to 121.795.
  - **Round down** if the insignificant figures is less than halfway. 121.794_3 is rounded to 121.794.
  - **Round to the nearest *even* digit** if the number is exactly halfway.
    - 43.5_5 is rounded to 43.6
    - 43.4_5 is rounded to 43.4

If 43.45001 should be rounded to 43.5 not 43.4 due to there has digit after 5, which is NOT zero.

1.2-3 Experimental Errors

- Systematic errors
- Random errors

Examples of **systematic** errors:

- Dilution with impure solvent.

- Too narrow burette.

- Incorrect inspection angle.

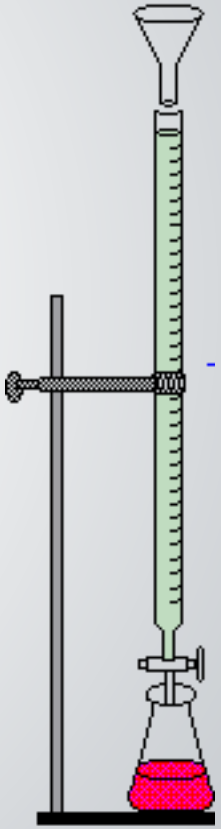

Systematic errors

Also called determinate error, arises from a flaw in equipment or the design of an experiment, which can be corrected.

Too narrow/wide burette

At a specific spot

Systematic errors

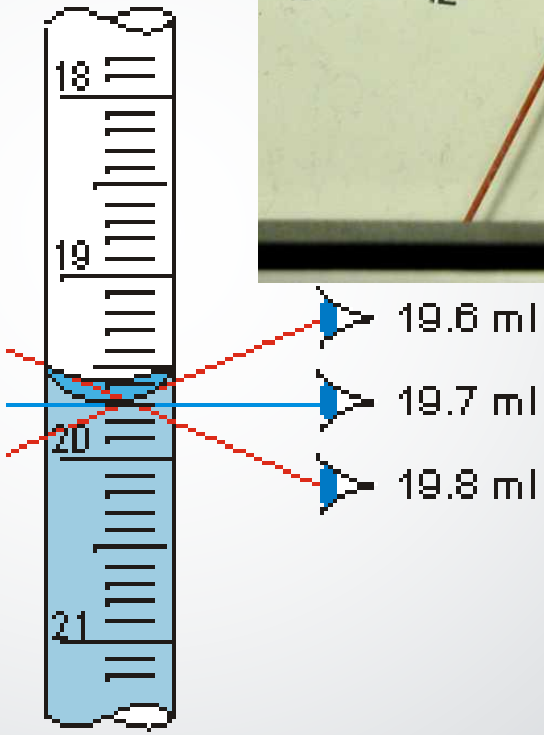

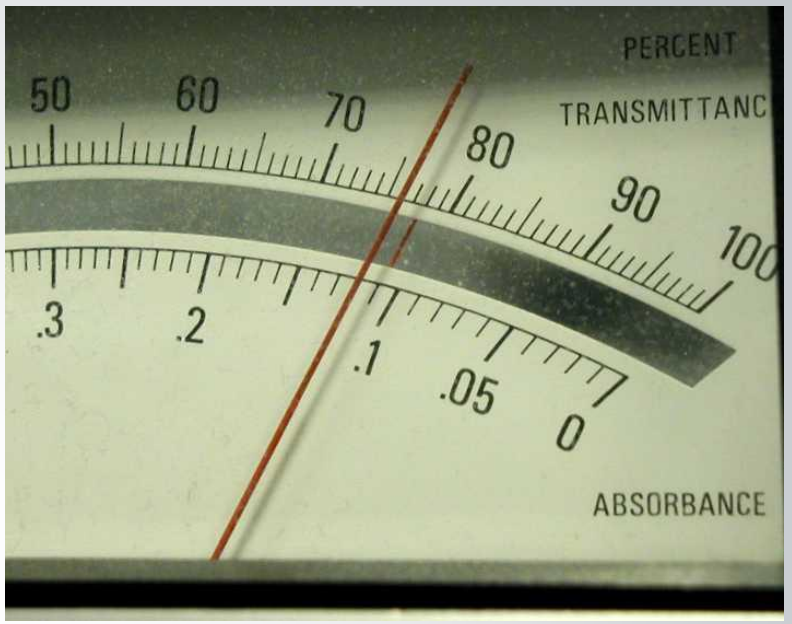

Incorrect inspection angle (Parallax)

◆ Random errors

- Also called indeterminate error, arises from uncontrolled variable in the measurement;

- It has an equal chance of being positive and negative, which can NOT be corrected.

Random errors

Examples of **Random** errors

- Reading error (24.14 mL or 24.12 mL)
- Electronic noise

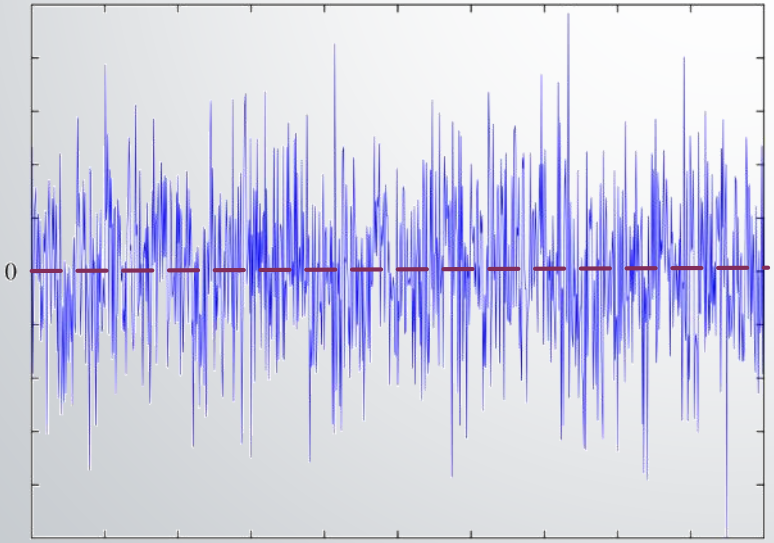

Random errors and systematic errors

Situation	Random effects	Systematic effects	Uncertainty
1.	Strong	Strong	High
2.	Strong	Weak (or absent)	Medium
3.	Weak	Strong	Medium
4.	Weak	Weak (or absent)	Low

green circles denote **true value** yellow circles denote **measured values**

Accuracy, trueness and precision

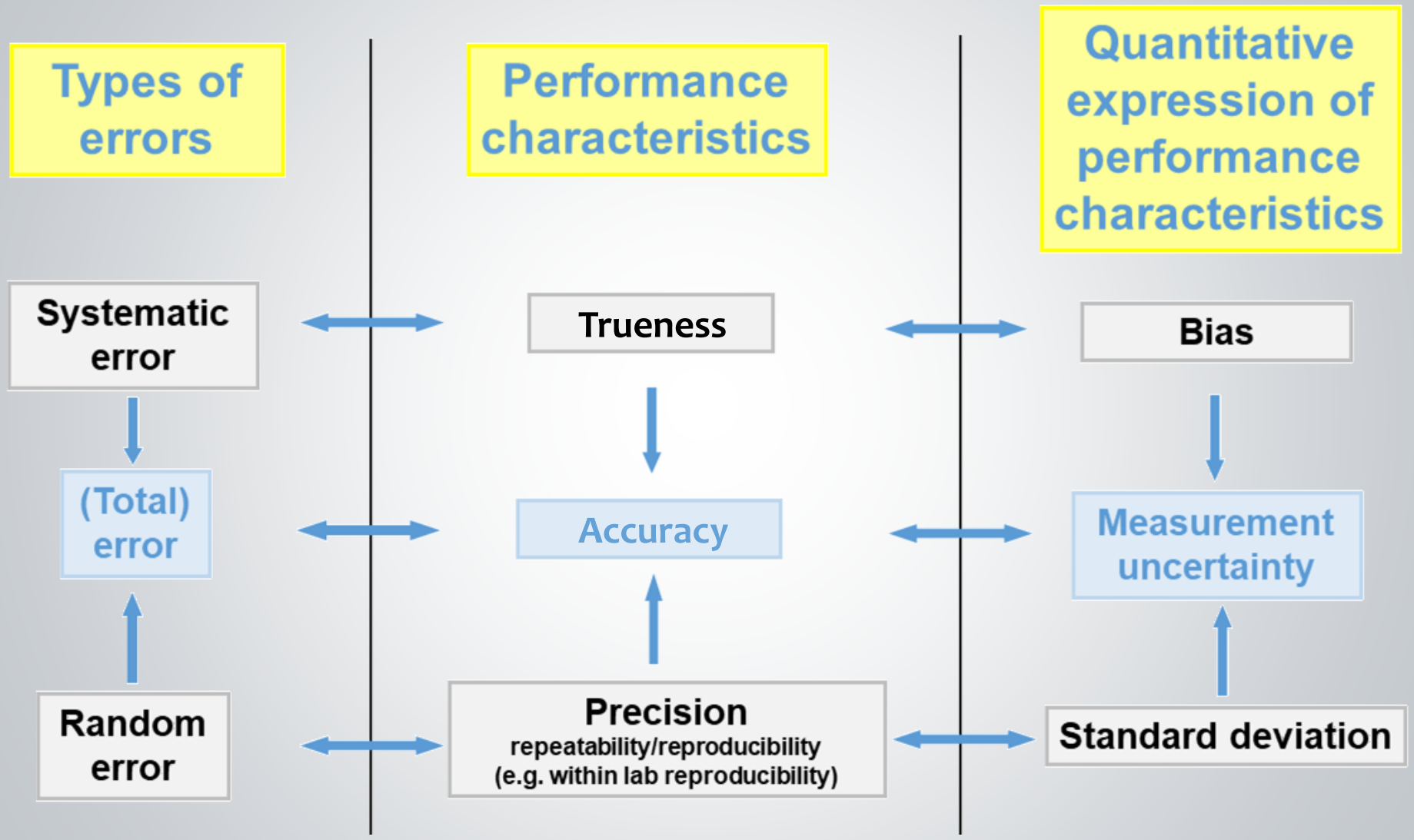

Accred Qual Assur **12,** 45–47 (2007)

Propagation of errors

Our goal is always to eliminate systematic error.

Most propagation of uncertainty computations deal with random error, not systematic error.

Mass: 4.635 ± 0.002; Volume: 1.13 ± 0.05 mL

Density (ρ): mass/volume = 4.635 g/1.13 mL

= 4.1018 ± ? g/mL

How many significant figures should be used?

What is the uncertainty in the computed ρ?

Propagation of errors

Addition and subtraction

Arithmetic

$$
\begin{array}{rl}
1.76\ (\pm\ 0.03) & \longleftarrow e_1 \\
+\ 1.89\ (\pm\ 0.02) & \longleftarrow e_2 \\
-\ 0.59\ (\pm\ 0.02) & \longleftarrow e_3 \\
\hline
3.06\ (\pm\ e_4) &
\end{array}
$$

Uncertainty in addition & subtraction

$$\boldsymbol{e_4 = \sqrt{e_1^2 + e_2^2 + e_3^2}}$$

Propagation of errors

$$
\begin{array}{rl}
\mathbf{1.76\ (\pm\ 0.03)} & \longleftarrow e_1 \\
\mathbf{+\ 1.89\ (\pm\ 0.02)} & \longleftarrow e_2 \\
\mathbf{-\ \ 0.59\ (\pm\ 0.02)} & \longleftarrow e_3 \\
\hline
\mathbf{3.06\ (\pm\ e_4)} & \Rightarrow \mathbf{3.06\ (\pm\ 0.04)}
\end{array}
$$

$$\boldsymbol{e_4 = \sqrt{e_1^2 + e_2^2 + e_3^2}}$$

$$= \sqrt{0.03^2 + 0.02^2 + 0.02^2}$$

$$= 0.04$$

Propagation of errors

3.06 (± e_4) ⇨ **3.06 (± 0.04)**

Absolute uncertainty

Relative uncertainty

$$\textit{Relative uncertainty} = \frac{\textit{absolute uncertainty}}{\textit{magnitude of measurement}}$$

$$\%\ \textit{Relative uncertainty} = \textit{Relative uncertainty} \times 100\%$$

$$= \frac{0.04}{3.06} \times 100\% = 1.30_7\%$$

% Relative uncertainty: 3.06 (± 1% or 1.3%)

Relative uncertainty: 3.06 (± 1% or 1.3%)

- **Usually, just ONE significant figures is kept in the error.**

  However, if the number is between 1 and 2, we can keep one more digit in the result.

- The rule behind this is the uncertainty should change by less than 10% (relative) when rounding off it. If uncertainty is 0.15, then rounding it to 0.2 would change it by 33%. At the same time if it is 0.55, then by rounding up to 0.6 g would change by 9% (relative).

- However, in the exam, both of them are considered to be correct, which means 1% and 1.3% are both available.

Propagation of errors

Uncertainty in multiplication & division

$$\frac{1.76(\pm 0.03)\times 1.89(\pm 0.02)}{0.59(\pm 0.02)} = 5.64 \pm e_4$$

Firstly, convert absolute uncertainty into *%e*

$$\frac{1.76(\pm 1._7\%)\times 1.89(\pm 1._1\%)}{0.59(\pm 3._4\%)} = 5.64 \pm e_4$$

- Always retain more digits than necessary during a calculation and round off to the appropriate digits at the end of result.
- *The subscrip digits* are kept for the accuracy and they are NOT S.F.

Propagation of errors

Uncertainty in multiplication & division

$$\frac{1.76(\pm 1._7\%)\times 1.89(\pm 1._1\%)}{0.59(\pm 3._4\%)} = 5.64 \pm e_4$$

$$\boxed{\%e_4 = \sqrt{(\%e_1)^2 + (\%e_2)^2 + (\%e_3)^2}}$$

$$\%e_4 = \sqrt{(1.7\%)^2 + (1.1\%)^2 + (3.4\%)^2} = 4._0\%$$

The final answer: $5.6\ (\pm\ 4\%)$ **(relative uncertainty)**

$5.6\ (\pm\ 0.2)$ **(absolute uncertainty)**

Significant figures with uncertainty

$$\frac{0.002364(\pm 0.000\,003)}{0.02500(\pm 0.000\,05)}$$

$$\%e_3 = \sqrt{(\%e_1)^2 + (\%e_2)^2}$$

$$= 0.09456\ (\pm 0.000153) = 0.09456\ (\pm 0.0002)???$$

$$= 0.0946\ (\pm 0.0002)$$

SF of quotient should be modified by the mantissa of uncertainty

Summary of equations on uncertainty

Function	Uncertainty
$y = x_1 + x_2$	$e_y = \sqrt{e_{x_1}^2 + e_{x_2}^2}$
$y = x_1 - x_2$	$e_y = \sqrt{e_{x_1}^2 + e_{x_2}^2}$
$y = x_1 \cdot x_2$	$\%e_y = \sqrt{\%e_{x_1}^2 + \%e_{x_2}^2}$
$y = \dfrac{x_1}{x_2}$	$\%e_y = \sqrt{\%e_{x_1}^2 + \%e_{x_2}^2}$

(*e* is absolute uncertainty)

(*e* is % relative uncertainty)

Some practices

The first digit (NOT zero) of absolute uncertainty is the last significant figure of magnitude in result.

$$\frac{0.002664(\pm 0.000\ 003)}{0.02500(\pm 0.000\ 05)} = 0.10656\ (\pm 0.00024)$$

$$= 0.1066\ (\pm 0.0002)$$

$$\frac{0.821(\pm 0.002)}{0.803(\pm 0.002)} = 1.02242\ (\pm 0.00356)$$

$$= 1.022\ (\pm 0.004)$$